# 3. SEMICONDUCTOR LASER

**Tasks:**

a) Measure the static $I(U)$ characteristics of a semiconductor laser.

b) Measure the static $P_L(I)$ characteristics (emitted optical power vs. electrical current) of a semiconductor laser and determine the threshold current $I_{th}$, the differential efficiency $\eta_d$, and the electrical efficiency $\eta_{el}$.

c) Using the DC and *lock-in* measuring techniques, determine the optical transmittance of a plastic foil sample at the wavelength of the semiconductor laser.

**Introduction:**

We will be using the semiconductor laser (or laser diode, LD) Sanyo DL-3147-011. The basic structure of the laser is shown in Figure 3.1. The active layer is comprised of heterojunctions with quantum dots (MQW – *Multiple Quantum Well*) based on the compound material $(Al_xGa_{(1-x)})_yIn_{(1-y)}P$. The desired optical and electrical properties of the layer are obtained by the mixtures of elements Al, Ga, and In (ratios $x$ and $y$) in the compound. The laser structure also features a current barrier layer that helps to direct charge carriers into the active region of the laser.

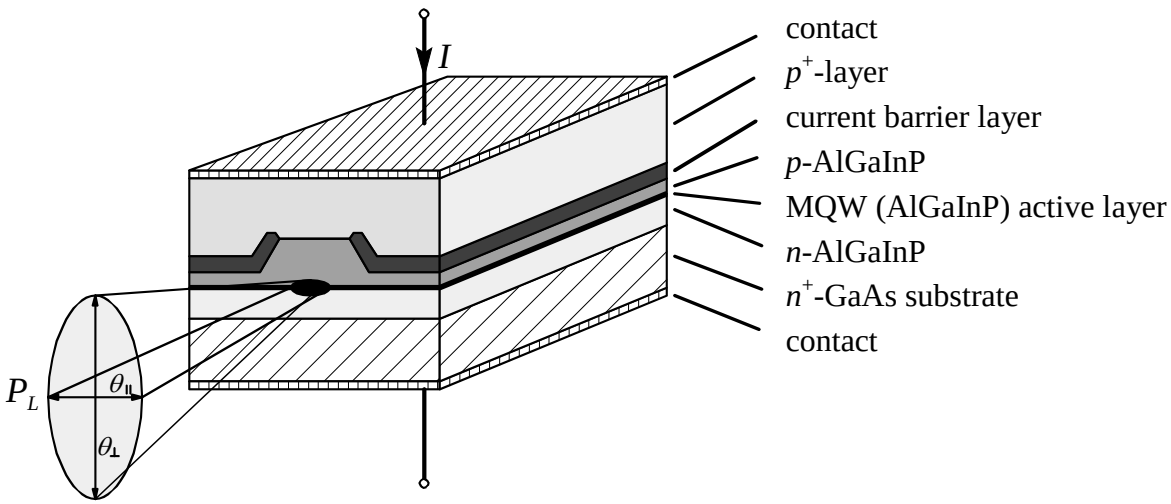


Figure 3.1: Structure of a MQW semiconductor laser.

The semiconductor laser emits red light with the central wavelength $\lambda = 655$ nm and maximum power $P_L = 5$ mW. The casing also contains a *pin*-photodiode that can be used to measure the output optical power of the laser for regulation purposes (Figure 3.2).

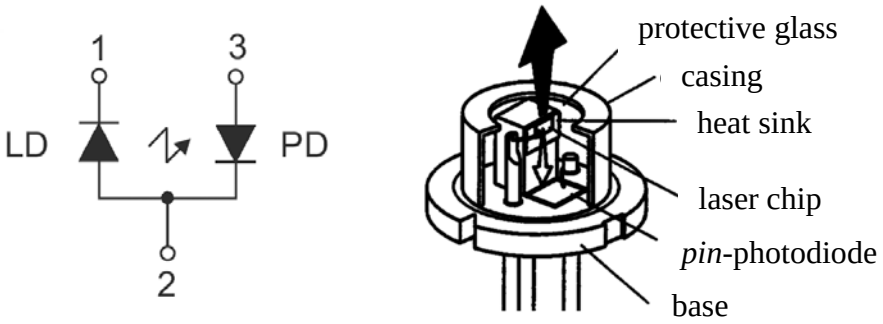


Figure 3.2: Schematic and casing of the semiconductor laser and the *pin*-photodiode.

Since the output angle of the emitted light is broad (common for all semiconductor lasers), a collimator is used (Figure 3.3) to narrow the laser light into a parallel beam with divergence of less than 1 mrad. However, collimators (especially cheap ones) may significantly reduce the transmitted optical power, in our case down to 40 % (2 mW).

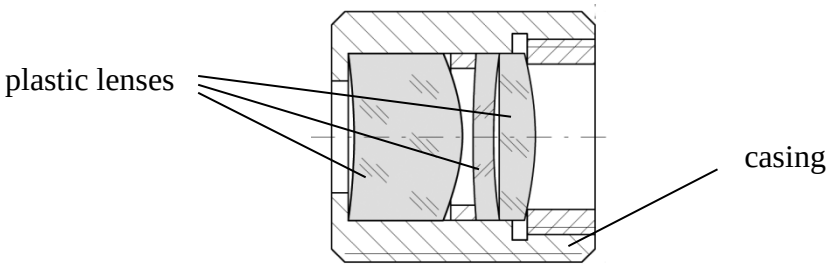


Figure 3.3: Collimator cross-section.

Parameters of the semiconductor laser and collimator:

| **Parameter** | | **laser DL–3147–011** | | | **collimator** |
|---|---|---|---|---|---|
| | | Min | Typ | Max | Max |
| Lasing wavelength $\lambda$ | nm | 650 | 655 | 660 | |
| Output optical power $P_L$ | mW | | | 5 | 2 |
| Threshold current $I_{th}$ | mA | 22 | 30 | 50 | |
| Operating current $I_n$ ($P_L$ = 5 mW) | mA | | 40 | 60 | |
| Operating voltage $U_n$ ($P_L$ = 5 mW) | V | | 2.2 | 2.6 | |
| Reverse voltage LD | V | | | 2 | |
| Reverse voltage PD | V | | | 30 | |
| Dimensions of the light beam | mm | | | | 4 x 2 |
| Beam divergence $\theta_\perp / \theta_{\parallel}$ | ° | 22/6 | 32/8 | 38/12 | 0.03 (0.5 mrad) |
| Off axis angle $\theta_\perp / \theta_{\parallel}$ | ° | | | ±1.5/2.5 | 0.6 (10 mrad) |
| Operating temperature | °C | -10 | | +50 | |
| Storage temperature | °C | -40 | | +85 | |

**Experimental procedure:**

The schematic of the measurement circuit is presented in Figure 3.4. The semiconductor laser is biased by a constant current source, the current can be controlled by the potential (voltage) of the contact "Tok LD". The emitted optical power is measured by means of two photodiodes: the first is the internal photodiode enclosed within the same casing as the laser ($PD_{int}$), whereas the second is the external photodiode located on the circuit board ($PD_{ext}$). The photo-generated electrical current is measured at the output contacts of two transimpedance amplifiers (*I-U* converters).

The measurement circuit is powered symmetrically (±10 V) using a DC voltage source. **To prevent laser from accidentally drawing too much current, set the current limit to 50 mA on both outputs of the voltage source!**

All the measurements will be performed automatically by means of the virtual environment LabVIEW. For this purpose, a data acquisition interface card (DAQ) will be used to drive the laser as well as to measure the signals of both photodetectors.

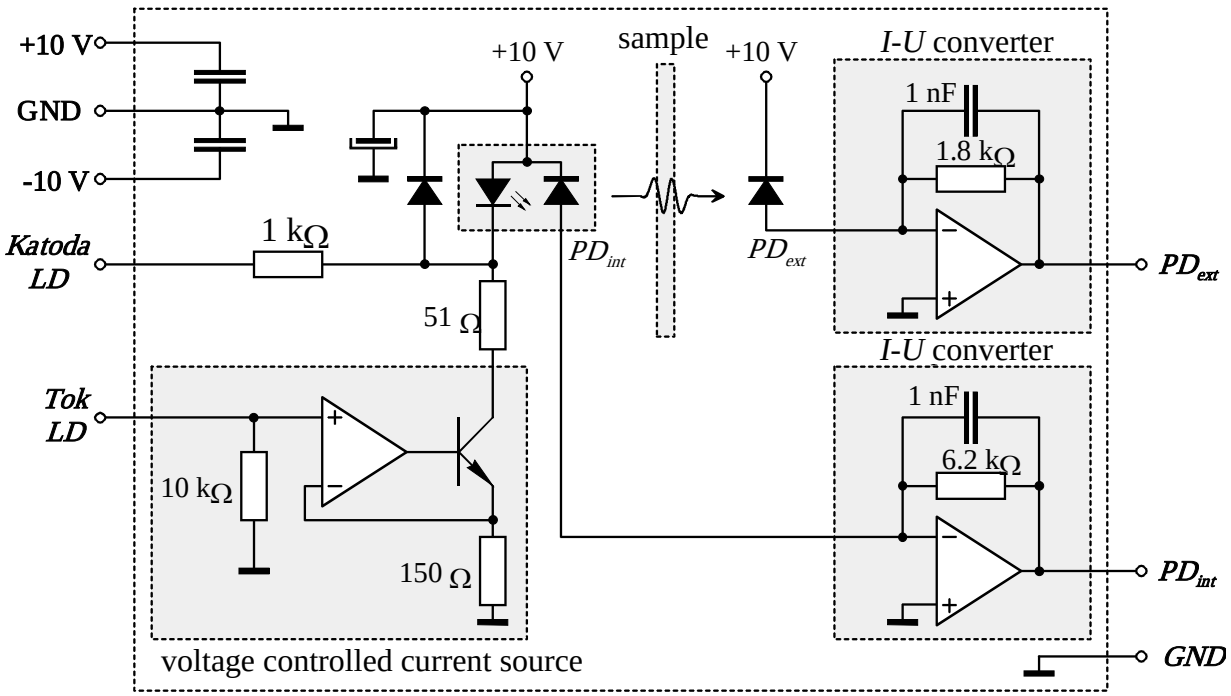


Figure 3.4: Schematic of the measurement circuit.

### a) Static $I(U)$ characteristics of the semiconductor laser

The static $I(U)$ characteristics of the laser will be measured using the LabVIEW program *"OPT_Lab_03a.vi"*. The measurement circuit is connected as shown in Figure 3.5. During the measurement, the current of the laser will be set by the voltage of the contact "Tok LD", and the voltage of the laser will be measured between the contacts "Katoda LD" and "+10 V". From the measured characteristics, determine the voltage of the laser at the operating current $I_n$ = 34 mA and the threshold current $I_{th}$ (not yet known, will be measured under b) below).

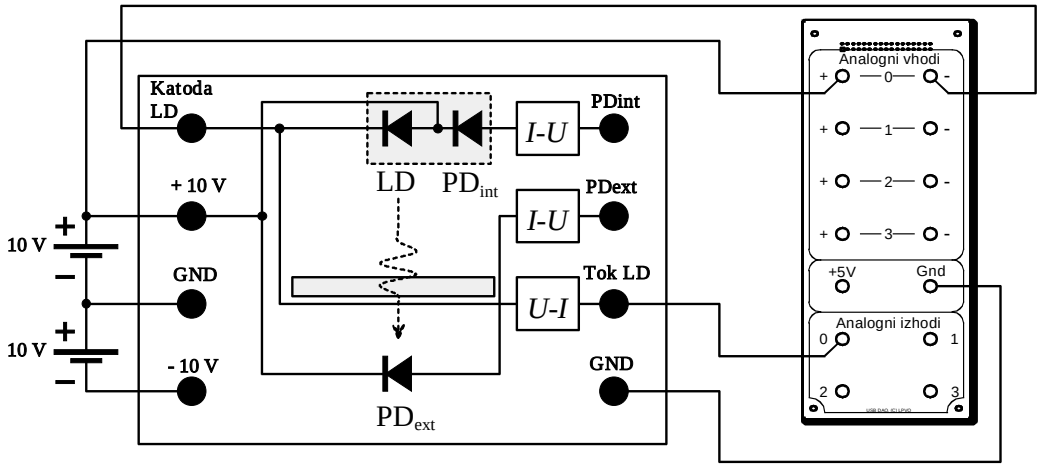


Figure 3.5: Connection of the DAQ interface and the measurement circuit for measuring the static $I(U)$ characteristics of the semiconductor laser.

$U_{LD}(I_n)$ = _____ $U_{LD}(I_{th})$ = _____

### b) Static $P_L(I)$ characteristics of the semiconductor laser

The static $P_L(I)$ characteristics of the laser will be measured using the LabVIEW program *"OPT_Lab_03b.vi"*. The measurement circuit is connected as shown in Figure 3.6. The characteristics will be measured twice; each time a different photodiode will be used (internal and external) to measure the emitted optical power of the laser.

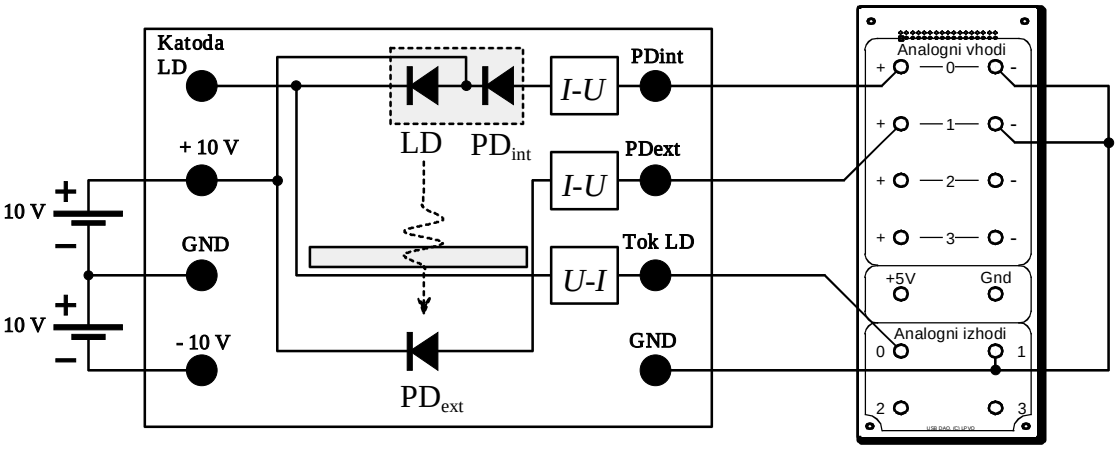


Figure 3.6: Connection for the rest of the measurements.

By extrapolating the steep linear slope of the $P_L(I)$ characteristics, determine the threshold current $I_{th}$ of the semiconductor laser as shown in Figure 3.7. Also determine the differential efficiency $\eta_d$ and the maximal emitted optical power $P_{Lmax}$ in both cases (measurements with the internal and external *pin*-photodiode). Finally, calculate the electrical efficiency $\eta_{el}$ of the semiconductor laser at the operating current $I_n$ = 34 mA ($\eta_{el} = P_L / P_{el}$).

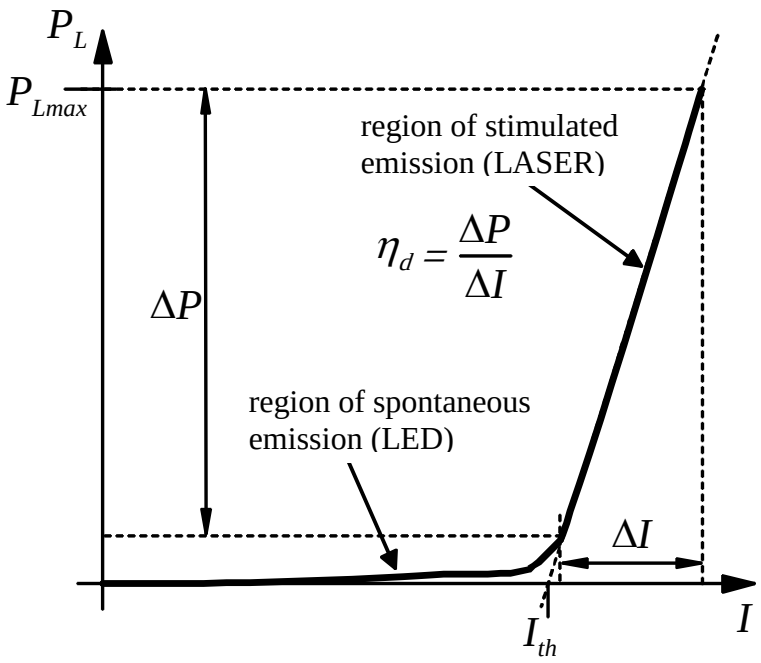


Figure 3.7: $P_L(I)$ characteristics of the semiconductor laser with all the important parameters.

i) Internal photodiode results:

$P_{Lmax}$ = _____

$I_{th}$ = _____

$\eta_d$ = _____

$\eta_{el}$ = _____

ii) External photodiode results:

$P_{Lmax}$ = _____

$I_{th}$ = _____

$\eta_d$ = _____

$\eta_{el}$ = _____

**c) Measurement of optical transmittance**

For measuring the optical transmittance of a sample at the desired wavelength (in our case we will measure the transmittance of a coloured plastic foil), we require a monochromatic light source (e.g. laser) located in front of the sample and a detector (e.g. *pin*-photodiode) located behind the sample. Many measurement techniques exist, but in principle they are all based on comparing two signals of the detector: i) the signal obtained with the sample in place (i.e. light goes through the sample), and ii) the signal obtained with the sample removed from the system (i.e. light goes directly to the detector). In our case, the transmittance of the plastic foil at the wavelength of the semiconductor laser will be measured by means of two different measuring techniques. The connection of the measurement circuit remains the same as before.

**i) DC method:**

In the DC method, the laser is biased with a DC current and therefore emits light continuously. We first measure the signal of the photodetector without the sample in place ($I_{PD,1} = k \cdot P_L$), and then we measure the signal of the photodetector with the sample in place ($I_{PD,2} = k \cdot T \cdot P_L$). The optical transmittance is obtained by dividing the results ($T = I_{PD,2}/I_{PD,1}$). The main drawback of the method is that some signal of the photodetector can be obtained even when the laser is turned off. This is because of the light noise that is present in the room, such as ambient lights, daylight, etc. Furthermore, the noise in the room changes constantly and it is difficult to eliminate it from the measurement entirely. Good shading of the measurement system (e.g. black box) and long integration times are required for accurate measurements.

Using the DC method, measure the optical transmittance of the plastic foil and write down the results in the table (final page of these instructions). For measuring, use the LabVIEW program *"OPT_Lab_03c.vi"*. For each measurement, change the power of the laser and the light noise conditions in the room, as specified in the table. Set the **integration time** of the measurements to **1000 ms**.

Detailed procedure:

- Set the **integration time** to **1000 ms**.
- Set the optical power of the laser (see table).
- Set the light noise conditions in the room (see table).
- Remove the sample from the slot (if present).
- Turn on the laser (click **OFF/ON** button).
- Wait for the signal to stabilize and click **Save – Without sample**.
- Insert the sample into the slot.
- Wait for the signal to stabilize and click **Save – With sample**.
- Write down the result (optical transmittance $T$) into the correct field in the table.

**ii) *Lock-in* method:**

In the *lock-in* method, the light source is modulated by some known frequency, which should be different than any frequency of the light noise in the room. Modulation of the light source can be achieved mechanically or electrically. Mechanically, a rotor blade (chopper) can be used to turn a continuous light beam into a modulated beam. In the case of semiconductor lasers, however, modulation can also be achieved electrically by driving the laser using an AC source. The *lock-in* system (e.g. lock-in amplifier) is then able to filter out (from the entire signal of the photodetector) only the signal that corresponds to the specified frequency. Thus, all the light noise can be eliminated efficiently, even if the power of the noise is more than 10 times larger than the power of the light source. Consequently, the *lock-in* method is one of the most widely used measuring techniques in modern optoelectronics.

In our case, we will drive the laser by a square-shaped AC signal, as shown in Figure 3.8 – $u_1$. The signal of the photodetector will be a combination of the AC component (laser) and other components (noise), as shown in Figure 3.8 – $u_2$. The noise components can be eliminated by first multiplying the signal of the photodetector by –1 in each half-period when the laser is turned off (Figure 3.8 – $u_3$), and then averaging the results (Figure 3.8 – $u_{out}$).

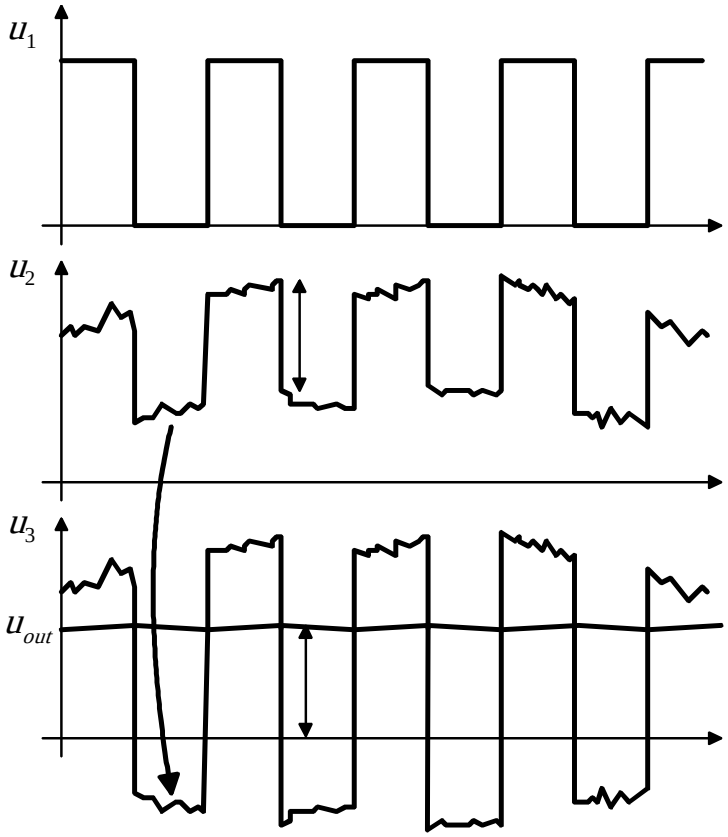


Figure 3.8: The principle of the simple *lock-in* measuring technique.

Using the *lock-in* method, measure the optical transmittance of the plastic foil and write down the results in the table below. For measuring, use the LabVIEW program *"OPT_Lab_03d.vi"*. For each measurement, change the modulation frequency, the power of the laser and the light noise conditions in the room, as specified in the table. Set the **cut-off frequency** of the low-pass filter to **1 Hz**. For driving the laser, use the AC voltage source that should be connected between the contacts **"Tok LD"** and **"GND"** (remove the previous connection to the 0 output of the DAQ interface card).

Detailed procedure:

- Set the **cut-off frequency** of the low-pass filter to **1 Hz**.
- Set the modulation frequency of the laser (see table).
- Set the optical power of the laser (see table).
- Set the light noise conditions in the room (see table).
- Remove the sample from the slot (if present).
- Wait for the signal to stabilize and click **Save – Without sample**.
- Insert the sample into the slot.
- Wait for the signal to stabilize and click **Save – With sample**.
- Write down the result (optical transmittance *T*) into the correct field in the table.

**Optical transmittance – measurement results:**

| **Method** | | **DC** | | **lock-in** | | | |
|---|---|---|---|---|---|---|---|
| | | | | ***f* = 100 Hz** | | ***f* = 150 Hz** | |
| Laser power | | 0.4 mW | 4 mW | 0.4 mW | 4 mW | 0.4 mW | 4 mW |
| Transmittance [%] | Shading | | | | | | |
| | Lights ON | | | | | | |
| Maximal deviation between the results (max – min) | | | | | | | |