1. PRINCIPLES OF OPTICS

1.1 A light beam is incident at angle θ on top of a flat mirror. The second flat mirror is positioned so that it forms an angle of 90 ° with the first mirror. The light beam is reflected from both mirrors, as shown in the figure. What is the angle between the direction of the incident beam and the direction of the reflected beam?

Solution:

The angle between the two directions is 180 °. Since the two mirrors form an angle of 90 °, the reflected beam propagates in exactly the opposite direction compared to the incident beam. This is called »retro-reflection«, and the two mirrors combined are called a »retro-reflector«.

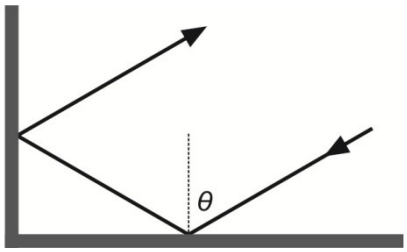

1.2 A light beam is incident at angle 70 ° on top of a flat mirror. The second flat mirror is positioned so that it forms an angle of 120 ° with the first mirror. The light beam hits the first mirror 0.3 m away from the corner with the second mirror (similar situation to that shown in the figure in Problem 1.1). What is the distance d that the light beam travels between the first reflection (from the first mirror) and the second reflection (from the second mirror)?

Solution:

The problem is solved using basic trigonometry.

***d* = 0.4 m**

1.3 In the year 1969, the astronauts in the Apollo 11 mission positioned a plate with retro-reflectors on the surface of the Moon. Since then, the plate has been used to measure the distance from the Earth to the Moon using a strong laser (*»Lunar Laser Ranging«*). The time needed for a laser beam to travel from the Earth to the Moon and back is 2.51 s. The radius of the Earth is R = 6370 km, the radius of the Moon is r = 1740 km, the distance between the centers of the Earth and the Moon is d = 384000 km. What is the velocity of light c that can be calculated from these data?

Solution:

Light travels twice the distance between the surface of the Earth and the surface of the Moon in the time t = 2.51 s.

Velocity of light: $c_0 = \frac{l}{t} = \frac{2\cdot(d-R-r)}{t}$

c_0 = 299513944 m/s

1.4 A light beam is incident from air (n_1 = 1) on top of a glass plate (n_2 = 1.5) at an angle θ_1 = 30 °. What is the angle of propagation of light as it enters glass?

Solution:

Apply the (Snell) law of refraction: $\boxed{n_1 \cdot \sin\theta_1 = n_2 \cdot \sin\theta_2}$

θ_2 = 19.47 °

1.5 A light beam is incident from air on top of a glass plate at an angle θ_1 = 30 °. The thickness of the plate is 2 cm, the refractive index of glass is 1.5. At what angle (θ_3) does the light beam exit the glass at the bottom side? What is the distance (shift) between the direction of propagation of the incident beam and the beam that exits the glass plate at the bottom side?

Solution:

To determine the angles of propagation, we need to apply the law of refraction two times (once for each interface). We find out that the beam that exits the glass plate at the bottom side keeps the same direction as the incident beam (because the material is the same – air in both cases), there is only a shift due to refraction in glass.

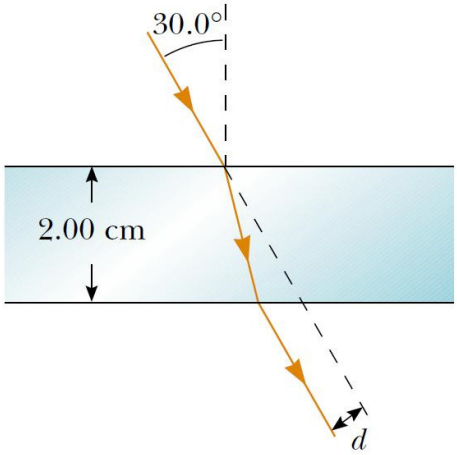

$\theta_3 = \theta_1$ = 30 °

d = 0.38 cm

1.6 A 800 nm thick layer of aluminum-doped zinc oxide (ZnO:Al, also called a TCO – »transparent conductive oxide«; typically used as the front contact in thin-film solar cells) is deposited on top of the glass plate from the previous Problem 1.5. The refractive index of TCO is 1.95. What is the angle of propagation of light inside the TCO, if the incident angle in air is as before θ_1 = 30 °? What is the angle of propagation in glass? At what angle does the light beam exit the glass at the bottom side?

Solution:

We are dealing with a multi-layer structure: air / TCO / glass / air. To determine the angles of propagation within each layer, we can apply the law of refraction, beginning with the front interface and moving downward. It turns out that the angle of propagation θ_i inside any layer with the refractive index n_i can be calculated directly from the incident angle θ_1 and the refractive index of the incident material n_1.

Law of refraction for i-th layer inside the multi-layer structure: $n_i \cdot \sin\theta_i = n_1 \cdot \sin\theta_1$

θ_2 = 14.86 °

θ_3 = 19.47 °

θ_4 = 30 °

1.7 A purple light beam (λ = 400 nm) is incident on the side of an equilateral (all sides of the same length) prism at an angle θ_1 = 50 °. The refractive index of the prism at this wavelength is 1.71. At what angle does the light beam exit the prism on the other side?

Solution:

We apply the law of refraction and basic trigonometry. To calculate the angle θ_3 we need to remember what is the sum of all the angles inside a four-sided polygon (indicated as red in the figure). So we can first calculate α from the known γ, and then we can calculate θ_3 from α and θ_2.

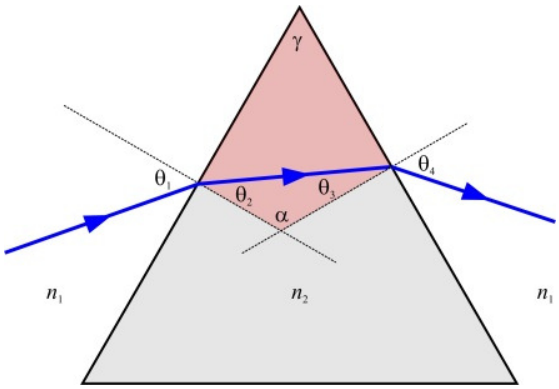

θ_4 = 70.3 °

1.8 A red light beam (λ = 650 nm) is incident on the side of the prism from Problem 1.7 at the same angle and in the same point. The refractive index of the prism at this wavelength is 1.67. At what angle does this light beam exit the prism on the other side?

Solution:

The procedure is the same as in Problem 1.7. We find out that the red light refracts a little less than the purple light, due to the lower refractive index. The fact that the refractive index of a material typically changes over different wavelengths is called »dispersion«. Typically, larger refractive index values are observed at shorter wavelengths, and lower refractive index values are observed at longer wavelengths.

θ_4 = 64.4 °

1.9 A purple light beam (λ = 400 nm) is incident on the side of the prism from Problem 1.7. What is the minimal allowed incident angle at which we can still observe a light beam exiting the prism on the other side?

Solution:

If the incident angle θ_1 becomes too small, the angle θ_3 at which the light beam hits the second interface inside the prism (glass/air) can become quite large. So large that the light beam can experience total internal reflection inside the prism at the glass/air interface.

The critical angle of total internal reflection: $\boxed{\sin\theta_{3,crit} = \frac{n_{air}}{n_{glass}}}$

We need to determine the minimal incident angle θ_1 by which we would just achieve the condition for total internal reflection on the other side (i.e. $\theta_3 = \theta_{3,crit}$).

$\theta_{1,\mathrm{min}}$ = 44.5 °

1.10 Light rays from the Sun are incident on the surface of a lake at an angle θ_1 = 50 °. How much of the transverse electric (TE) and how much of the transverse magnetic (TM) polarized light is reflected from the surface, if the refractive index of water is 1.33?

Solution:

Fresnel coefficients for reflection:

$$R_{TE} = \left|\frac{n_1 \cdot \cos\theta_1 - n_2 \cdot \cos\theta_2}{n_1 \cdot \cos\theta_1 + n_2 \cdot \cos\theta_2}\right|^2$$

$$R_{TM} = \left|\frac{n_1 \cdot \cos\theta_2 - n_2 \cdot \cos\theta_1}{n_1 \cdot \cos\theta_2 + n_2 \cdot \cos\theta_1}\right|^2$$

By calculating the R values we can observe that the TE polarized light is reflected much more strongly compared to the TM polarized light. In fact, there even exists a single incident angle at which the TM polarized light doesn't get reflected at all (the Brewster angle; see Problem 1.11).

$\boldsymbol{R_{TE}}$ **= 6.6 %**

$\boldsymbol{R_{TM}}$ **= 0.05 %**

1.11 A TM polarized light beam is incident on the surface of an unknown material. By experimentation we find out that at the incident angle of 67.54 °, there is no reflected light from the surface (i.e. $R_{TM} = 0$). What is the refractive index of the unknown material?

Solution:

The incident angle at which there is no reflection of TM polarized light is called the »polarization angle« or the »Brewster angle«.

Polarization (Brewster) angle: $\tan\theta_{1B} = \frac{n_2}{n_1}$

$\boldsymbol{n_2}$ **= 2.42**

1.12 What is the angle of the transmitted (refracted) beam in Problem 1.11 that propagates inside the unknown material? What is the angle between the direction of the transmitted beam and the direction of the reflected beam (if we could see it)?

Solution:

At the Brewster angle (and only at the Brewster angle), the angle between the reflected and the refracted beam is 90 °.

$\boldsymbol{\theta_2}$ **= 22.46 °**

$\boldsymbol{\Delta\theta}$ **= 90 °**

1.13 A HeNe laser light beam (λ = 632.8 nm) shines through slits with a distance P = 50 μm between them. We can observe an interference pattern on a screen located 5 m away from the slits. What is the distance on the screen between the maxima of the 0th interference mode (m = 0) and the 1st interference mode (m = 1)?

Solution:

Diffraction grating equation: $\boxed{\sin\theta_m = \frac{m\cdot\lambda}{P}}$

Using the equation, we can calculate the angle θ_1 of the first interference mode, and then also the distance between the two modes on the screen.

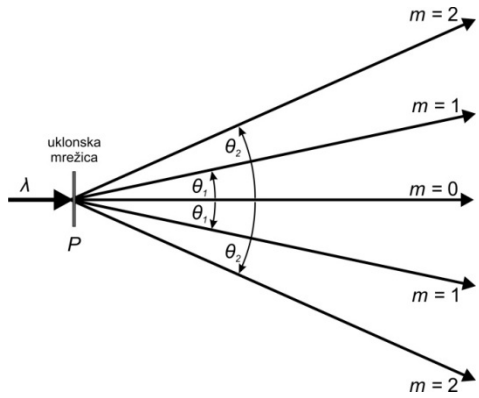

d_1 = 6.3 cm

1.14 A light source that contains three spectral components at λ_1 = 320 nm, λ_2 = 550 nm, and λ_3 = 640 nm shines through a diffraction grating with 1180 slits per millimeter. At what angles away from the grating do we find the first interference mode (m = 1) for each of the three spectral components? At what angles do we find the second interference mode (m = 2)?

Solution:

The period of the grating is calculated from the slit density: $P = \frac{1\,mm}{1180} = 847.5\,nm$ nm

$\theta_{1,1}$ = 22.2 °

$\theta_{1,2}$ = 40.5 °

$\theta_{1,3}$ = 49.0 °

We can observe that the second interference mode does not exist for the wavelengths 550 nm and 640 nm. Also, we can see that the second mode for the wavelength 320 nm is located in the same direction as the first mode for the wavelength 640 nm. This is the so-called overlap of the interference modes, which is a common problem in monochromators.

Condition for overlap of interference modes: $\boxed{m_1 \cdot \lambda_1 = m_2 \cdot \lambda_2}$

$\theta_{1,1}$ = 49.0 °

1.15 What is the maximal wavelength for which we can still observe at least one interference mode using the grating from Problem 1.15?

Solution:

The existence of modes is related to the existence of the angles:

$$\sin\theta_1 \le 1 \quad \rightarrow \quad \sin\theta_1 = \frac{1\cdot\lambda}{P} \le 1 \quad \rightarrow \quad \boxed{\lambda \le P}$$

λ_{max} = 847.5 nm

2. LIGHT EMITTING DIODE (LED)

2.1 Light rays generated inside a GaAs LED propagate spherically away from the source in all directions, as shown in the figure. What is the maximal angle of propagation of the rays under which the rays are still able to exit the GaAs layer at the front side? The refractive index of GaAs is 3.6. What would be the maximal angle if we covered the LED with a parabolic lens made of an epoxy material with a refractive index of 1.4?

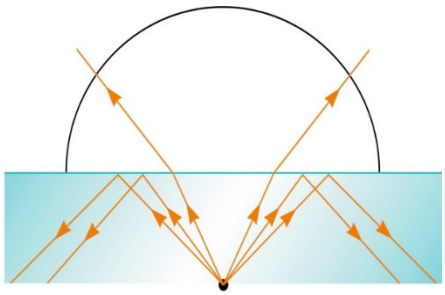

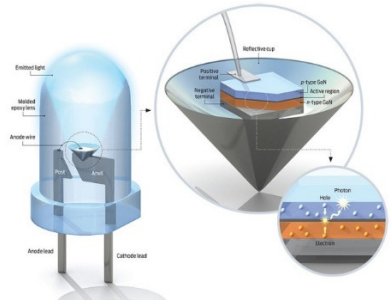

Solution:

Inside the LED, all the light rays that hit the front GaAs/air surface at a large enough angle will experience total internal reflection and, therefore, will not be able to couple out of the LED. This is a huge limitation, since the critical angle of total internal reflection is small due to the large contrast of the refractive indices (n_{air}/n_{GaAs} = 1/3.6). If, however, we cover the LED with an epoxy lens, the contrast of the refractive indices is now lower (n_{epoxy}/n_{GaAs} = 1.4/3.6), which means that the critical angle becomes larger, and thus more light can be coupled out of the LED. This way, we can increase the external quantum efficiency of the LED.

θ_1 = 16.1 °

θ_2 = 22.9 °

2.2 An LED driven with a current of 20 mA emits light at the wavelength of 555 nm. The external quantum efficiency of the LED is 10 %. What is the emitted optical power?

Solution:

The external quantum efficiency QE_{ext} = 10 % means that from every 100 recombined electrons (flowing <u>in</u> the device) we get 10 emitted photons (flowing <u>out</u> of the device). First, we need to express the flux of input electrons: $\phi_e = I/(q \cdot A)$. Then, from the known QE_{ext}, we can calculate the flux of output photons: $\phi_{ph} = QE_{ext} \cdot \phi_e = QE_{ext} \cdot I/(q \cdot A)$. The optical power is calculated from the flux of photons, the energy of the photons, and the area (cross-section) of the light beam:

$$P_{ph} = \phi_{ph} \cdot E_{ph} \cdot A = QE_{ext} \cdot \frac{I}{q \cdot A} \cdot \frac{h \cdot c_0}{\lambda} \cdot A = I \cdot QE_{ext} \cdot \frac{1}{\lambda} \cdot \frac{h \cdot c_0}{q}$$

P_{ph} = 4.47 mW

2.3 The FWHM width of the normalized spectrum $P_{ph}(E_{ph})$ of an LED at half maximum (FWHM – *"Full Width at Half Maximum"*) is typically $\Delta E_{ph} \approx 3 \cdot k \cdot T$, where k is the Boltzmann constant and T the temperature given in Kelvin. What is the FWHM width of the normalized spectrum $P_{ph}(\lambda)$ expressed in nanometers, $\Delta\lambda$, if the temperature is 25 °C and the peak wavelength of the emitted ligth is at (a) 870 nm, (b) 1300 nm, and (c) 1550 nm?

Solution:

We need to figure out how to express the width of the normalized spectrum in terms of wavelength, $\Delta\lambda$, instead of energy, ΔE_{ph}. We start from the equation for the photon energy:

$$E_{ph} = \frac{h \cdot c_0}{\lambda} \quad \rightarrow \quad \lambda = \frac{h \cdot c_0}{E_{ph}} \quad \rightarrow \quad \frac{d\lambda}{dE_{ph}} = -\frac{h \cdot c_0}{E_{ph}^2}$$

Then, we can approximate the derivative with small differences/increments ($d \rightarrow \Delta$):

$$\frac{d\lambda}{dE_{ph}} \approx \frac{\Delta\lambda}{\Delta E_{ph}} \approx \frac{h \cdot c_0}{E_{ph}^2} = \frac{h \cdot c_0}{(h \cdot c_0/\lambda)^2} = \frac{\lambda^2}{h \cdot c_0} \quad \rightarrow \quad \boxed{\Delta\lambda \approx \frac{\lambda^2}{h \cdot c_0} \cdot \Delta E_{ph} = \lambda^2 \cdot \frac{3 \cdot k \cdot T}{h \cdot c_0}}$$

$\Delta\lambda$ @ 870 nm = 47 nm

$\Delta\lambda$ @ 1300 nm = 105 nm

$\Delta\lambda$ @ 1550 nm = 149 nm

2.4 The energy gap (bandgap, E_g) of a GaAs LED at room temperature (300 K) is 1.42 eV. As the temperature increases, the energy gap becomes lower, according to the following equation: $dE_g/dT = -4.5 \cdot 10^{-4}$ eV/K. For how much does the peak wavelength of the emitted light change if the temperature increases by 10 °? (To solve this Problem, assume that the peak wavelength exactly matches the energy gap. In reality, however, this is not precisely the case – see Problem 2.5 for further details.)

Solution:

The problem can be solved in two ways:

a) We can calculate the corresponding wavelengths separately from the energy gaps at 300 K and 310 K, and then we can calculate the difference $\Delta\lambda$:

$$\lambda_1 = \frac{h \cdot c_0}{1.42\ eV} = 873.12\ \text{nm}, \qquad \lambda_2 = \frac{h \cdot c_0}{1.42\ eV - 10 \cdot 4.5 \cdot 10^{-4}\ eV} = 875.90\ \text{nm}$$

b) We can derive the general equation that relates $\Delta\lambda$ to ΔT:

$$\lambda = \frac{h \cdot c_0}{E_g} \quad \rightarrow \quad \frac{d\lambda}{dT} = -\frac{h \cdot c_0}{E_g^2}\left(\frac{dE_g}{dT}\right) = 0.277\ \text{nm/K}$$

$\Delta\lambda \approx$ 2.8 nm

2.5 An AlGaAs LED emits light with the peak wavelength of 820 nm at the ambient temperature 25 °C. What is the energy gap of the LED? The energy gap of the $Al_xGa_{1-x}As$ compound material can be changed by changing the ratios of Al and Ga elements according to the following relation: $E_g = 1.424 + 1.266 \cdot x + 0.266 \cdot x^2$ eV. Determine the ratio of Al (x).

Solution:

The energy of the emitted light at the peak wavelength generally doesn't match the energy gap of the material. Instead, it is typically larger than the energy gap by $k \cdot T$, where k stands for the Boltzmann constant and T for the temperature.

$$\boxed{E_{ph} = E_g + k \cdot T} \quad \rightarrow \quad E_g = E_{ph} - k \cdot T = \frac{h \cdot c_0}{\lambda} - k \cdot T$$

The ratio of Al in the compound can be determined by solving the quadratic equation.

$\boldsymbol{E_g}$ **= 1.4863 eV**

$\boldsymbol{x}$ **= 0.05**

2.6 An AlGaAs LED is used as a light source in an optical fiber network. The LED is driven by 40 mA, the voltage across the LED is 1.5 V. Using lenses, we can couple 25 µW of optical power into the optical fiber network. What is the efficiency of the system?

Solution:

We need to calculate the ratio of the optical power coupled into the optical fiber network and the total electrical power dissipated on the LED.

$\boldsymbol{\eta}$ **= 0.0417 %**

2.7 The exponential $I(U)$ characteristics of an LED can be approximated by two linear segments (see figure): Up to the voltage U_k = 1.5 V, no current can flow (0 A). From U_k onward, the current increases linearly with the slope g = 50 mS (this parameter that describes the slope of the $I(U)$ curve is often called a »differential or incremental conductivity«). The LED is connected in series with a resistor R and a voltage source with U_{DD} = 5 V. The current that flows through the circuit in the ideal case is 10 mA. What are the minimal and the maximal values of the electrical current in reality, if the resistor has a tolerance of 10 %?

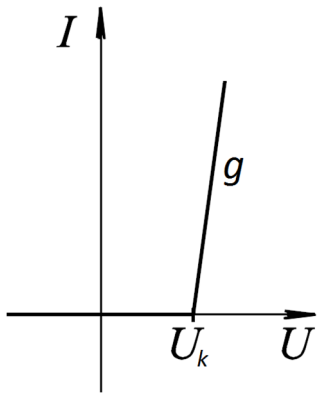

Solution:

Based on the $I(U)$ characteristics shown in the figure, we first calculate the voltage on the LED at the given current of 10 mA:

$$U_F = \frac{I_F}{g} + U_k = 1.7\,V$$

The voltage on the resistor is therefore U_R = 5 V – 1.7 V = 3.3 V, which means that the value of the resistor in the ideal case is R = 330 Ω.

However, since the resistor has a tolerance of 10 %, the actual value of the resistance can be anything between 90 % and 110 % of the ideal value, which means between 297 Ω and 363 Ω. We can calculate the current flowing through the LED at both values:

$$U_R = U_{DD} - U_F \quad \rightarrow \quad R \cdot I_F = U_{DD} - \left(\frac{I_F}{g} + U_k\right) \quad \rightarrow \quad I_F = \frac{U_{DD} - U_k}{R + 1/g}$$

If the $I(U)$ characteristics of the LED would be given as a graph (plot), we could solve the Problem graphically by plotting the $I(U)$ characteristics of the load line ($I = \frac{U_{DD} - U}{R}$) in the same plot; the solution would be the intersection of the two characteristics.

$\boldsymbol{I_{max}}$ **= 11 mA**

$\boldsymbol{I_{min}}$ **= 9 mA**

2.8 An LED with a differential resistance r = 15 Ω is connected in series with a resistor R and a voltage source with U_{DD} = 5 V. At the current I_0 = 10 mA, the voltage across the LED is U_0 = 2.2 V. What should be the value of the resistance R if we would like to drive the LED with a current of 30 mA?

Solution:

The Problem can be solved in a similar way as Problem 2.7. We know the combination of the current and voltage in the given operating point $I_0(U_0)$, we also know the differential resistance $r = 1/g$, so we can first calculate the voltage U_k (this is the voltage at which the two linear segments of the $I(U)$ characteristics intersect). Once we know U_k, we can then solve the second part of the Problem.

$$U_0 = U_k + r \cdot I_0 \quad \rightarrow \quad U_k = 2.05\text{ V} \quad \rightarrow \quad R = \frac{U_{DD} - U_k}{I_F} - r$$

$\boldsymbol{R}$ **= 83 Ω**

2.9 Using a current source circuit shown in the figure, we would like to drive three LEDs connected in series, each with a current of 30 mA and a voltage of 1.5 V. The voltage of the source is U_{CC} = 12 V, the voltage of the base-emitter junction on the transistor is U_{BE} = 0.7 V, the reference voltage of the breakdown (Zener) diode is U_Z = 2.7 V, the current of the breakdown diode should be I_Z = 1 mA. The current amplification factor of the transistor is large ($\beta \to \infty$). Calculate the resistances R_1 and R_E in the circuit. What is the maximal number of LEDs that we could drive at the same time using this circuit if the collector-emitter saturation voltage of the transistor is $U_{CE,sat}$ = 0.2 V?

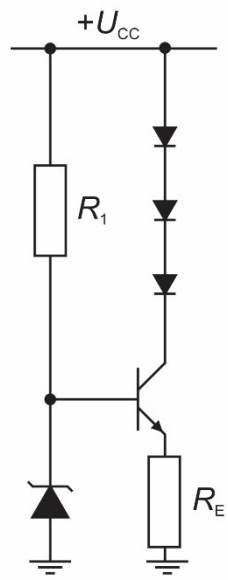

Solution:

The current source with a transistor and a breakdown diode enables a constant and stable current to flow through the LEDs, even if the source voltage or the ambient temperature are not exactly fixed. We need to calculate the values of the elements (resistors) in the circuit so that the collector current flowing through the LEDs will be 30 mA.

Voltage across the resistor R_1: $U_{R1} = U_{CC} - U_Z = 9.3$ V

Voltage across the resistor R_E: $U_{RE} = U_Z - U_{BE} = 2$ V

Resistance of the resistor R_1: $R_1 = U_{R1} / I_Z = 9.3$ kΩ

Resistance of the resistor R_E: $R_E = U_{RE} / I_E \approx U_{RE} / I_C = 67$ Ω

The collector-emitter voltage on the transistor in this case is $U_{CE} = U_{CC} - U_{RE} - 3*U_F$ = 5.5 V. Adding more LEDs in the series would lower this voltage. Since the lowest possible collector-emitter voltage (saturation voltage) is $U_{CE,sat}$ = 0.2 V, the total voltage that can be used to drive the LEDs is $U_{D,max} = U_{CC} - U_{RE} - U_{BE,sat}$ = 9.8 V. Therefore, we could drive at most 6 LEDs connected in series using this current source circuit (6*1.5 V = 9 V).

2.10 Determine the elements in a current source circuit from Problem 2.9 that could be used to drive two LEDs connected in series. The reference voltage of the breakdown diode is U_Z = 5.6 V, the current of the breakdown diode should be I_Z = 1 mA. The current flowing through the LEDs should be 20 mA. The $I(U)$ characteristics of the LED is approximated by two linear segments (see Problem 2.7) with U_k = 1.5 V and r = 20 Ω. Both LEDs are identical. The voltage U_{CC} of the circuit should be chosen so that the collector-emitter voltage on the transistor will be U_{CE} = 2 V. (U_{BE} = 0.7 V, $\beta \to \infty$)

Solution:

The voltage across each LED can be determined from the current: $U_D = U_k + r \cdot I_D$

Other parameters can be calculated following the procedure in Problem 2.9.

U_D = 1.9 V, U_{RE} = 4.9 V

R_E = 245 Ω, U_{CC} = 10.7 V, R_1 = 5.1 kΩ

3. LASER

3.1 A typical 5 mW He-Ne laser operates at a voltage of 2 kV and a current of 7 mA. What is the electrical efficiency of the laser (the ratio between the output optical power and the input electrical power)?

Solution:

$\boldsymbol{\eta_{el}}$ **= 0.036 %**

3.2 The diameter of the light beam emitted by a He-Ne laser is 1 mm. The laser emits the optical power of 5 mW at the wavelength of 633 nm. What is the optical power density? What is the flux of the photons emitted by the laser?

Solution:

Optical power density: $\boxed{J_{ph} = \frac{P_{ph}}{A}}$

Flux of photons: $\boxed{\phi_{ph} = \frac{J_{ph}}{E_{ph}} = \frac{P_{ph}}{E_{ph} \cdot A} = \frac{P_{ph} \cdot \lambda}{h \cdot c_0 \cdot A}}$

$\boldsymbol{J_{ph}}$ **= 6.37 kW/m^2**

$\boldsymbol{\phi_{ph}}$ **= 20.3·10^{21} s^{-1}m^{-2}**

3.3 A laser diode emits 2 mW of optical power at the wavelength of 670 nm. The laser diode is driven by an electrical current of 80 mA, the voltage across the diode is 2.3 V. The threshold current of the laser diode is 76 mA at the temperature of 25 °C. What is the electrical efficiency of the laser diode? If the current is increased to 82 mA, the emitted optical power is increased to 3 mW. Calculate the differential efficiency of the laser diode.

Solution:

The differential efficiency is defined as the ratio of the increase of the emitted optical power to the increase of the driving electrical current.

Differential efficiency: $\boxed{\eta_d = \frac{\partial P_{ph}}{\partial I} \approx \frac{\Delta P_{ph}}{\Delta I}}$

$\boldsymbol{\eta_{el}}$ **= 1.09 %**

$\boldsymbol{\eta_d}$ **= 0.5 W/A**

3.4 The threshold current of a laser diode increases with temperature, since more current is needed to achieve the condition of population inversion at higher temperatures. The threshold current of a given laser diode is 50 mA at the temperature of 25 °C, the differential efficiency is 0.4 W/A. The threshold current increases with temperature for approximately 1.5 % per a degree of temperature change. If the laser emits 5 mW of optical power at 25 °C, how much power does it emit at 40 °C? How much power does it emit at 10 °C?

Solution:

We first calculate the electrical current that drives the laser diode at 25 °C.

$$\frac{P_{ph}}{I - I_{th}} = \eta_d \quad \rightarrow \quad I = \frac{P_{ph}}{\eta_d} + I_{th} = 62.5 \text{ mA}$$

Next, we calculate the threshold currents at 40 °C and 10 °C, and then the optical powers.

$$I_{th}(40\ °C) = 122.5\% \cdot I_{th} = 61.25 \text{ mA} \quad \rightarrow \quad P_{ph}(40\ °C) = \eta_d \left(I - I_{th}(40\ °C)\right)$$

$$I_{th}(10\ °C) = 77.5\% \cdot I_{th} = 38.75 \text{ mA} \quad \rightarrow \quad P_{ph}(10\ °C) = \eta_d \left(I - I_{th}(10\ °C)\right)$$

***P_{ph}* @ 40 °C = 0.5 mW**

***P_{ph}* @ 10 °C = 9.5 mW**

3.5 The length of the resonant cavity in a heterojunction AlGaAs laser is 200 μm. The refractive index of the material of the cavity is 3.7. The laser emits light with the peak wavelength of 870 nm. Calculate the mode number *m* at the peak wavelength. What is the separation δλ between the resonant modes that can exist within the resonant cavity? How many modes are present in the output light if the FWHM bandwidth of the laser is 6 nm? How many modes would be present if the length of the resonant cavity would be 20 μm?

Solution:

Following the principle of constructive interference, only light for which the following condition is fulfilled can exist within the resonant cavity (resonator) of a semiconductor laser (we can imagine that in this case, a standing wave is formed between the two sides of the cavity, which act as mirrors):

Modes that exist within the resonant cavity: $\boxed{m \cdot \frac{\lambda}{2n} = L}$

Thus, we can calculate the mode number at the peak wavelength: $m = \frac{L \cdot 2n}{\lambda}$

We can also derive the separation δλ between the modes (taking into account that *m* is generally very large):

$$\delta\lambda = \frac{L \cdot 2n}{m} - \frac{L \cdot 2n}{m+1} \approx \frac{L \cdot 2n}{m^2} = \frac{\lambda^2}{L \cdot 2n} \quad \rightarrow \quad \boxed{\delta\lambda \approx \frac{\lambda^2}{L \cdot 2n}}$$

We can observe that the separation between the modes becomes larger as the resonant cavity becomes shorter. The number of modes that are present in the output light can be calculated from the ratio of the FWHM bandwidth to the separation between the modes.

***m* = 1701**

a) Resonator L = 200 μm:

δλ = 0.511 nm

***N* = 11 modes**

b) Resonator L = 20 μm:

δλ = 5.11 nm

***N* = 1 mode**

3.6 A laser diode is driven using the current source circuit in the figure. The threshold current of the laser diode is 50 mA at the temperature of 25 °C. The differential efficiency is 0.5 W/A. The threshold current increases with temperature approximately for 1.5 % per a degree of temperature change. Calculate the optical power emitted by the laser diode at 25 °C. If we would like that this amount of optical power would be emitted at 50 °C, what should be the value of the resistance R_1 in this case? You can neglect the current flowing into the base of the transistor. (U_{BE} = 0.7 V, R_E = 50 Ω, R_1 = 1.1 kΩ, R_2 = 1 kΩ, U_{CC} = 12 V, $\beta \to \infty$)

Solution:

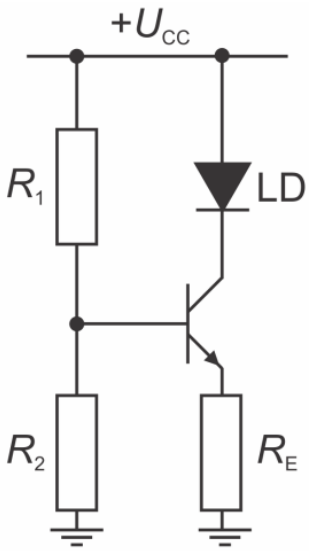

The collector current that drives the laser diode can be calculated from the parameters of the circuit. Since the current amplification factor β is large, we can assume that the collector current is approximately the same as the emitter current:

Current: $I_{LD} = I_C \approx I_E = \frac{U_{RE}}{R_E} = \frac{U_{R2} - U_{BE0}}{R_E} = \frac{\frac{R_2}{R_1+R_2} \cdot U_{CC} - U_{BE0}}{R_E}$

The emitted optical power: $P_{ph} = \eta_D \cdot (I - I_{th})$

As the laser diode heats up, its threshold current is increased, and the optical power is decreased. Consequently, we need to supply more current to the laser diode if we would like that it emits the same amount of optical power as before. A higher collector current can be achieved by reducing the resistance R_1.

I_{LD} @ 25 °C = 100 mA, I_{th} @ 50 °C = 68.75 mA, I_{LD} @ 50 °C = 119 mA

***P*$_{ph}$ = 25 mW**

***R*$_1$ = 804.5 Ω**

4. PHOTODETECTOR

4.1 The absorption coefficient of germanium is α = 10^4 cm^{-1}. Calculate the minimal thickness of a germanium photodetector, so that at least 95 % of the incident monochromatic optical power will be absorbed during the first passing through the layer.

Solution:

Absorption of optical power density inside a material: $\boxed{J_{ph}(x) = J_{ph}(0) \cdot e^{-\alpha \cdot x}}$

We need to calculate the thickness *d* at which the power density will fall to 0.05 % of the initial value.

$$\frac{J_{ph}(x)}{J_{ph}(0)} = 0.05 = e^{-\alpha \cdot d}$$

***d* = 3 µm**

4.2 A monochromatic light beam with the optical power density of 10 mW/cm^2 and the wavelength of 868 nm is perpendicularly incident on top of the *p*-layer of a *p-i-n* photodiode. The thicknesses of the *p*- and *n*-layers are 100 nm, the thickness of the *i*-layer is 2 µm, the absorption coefficient of all layers is 10^4 cm^{-1}. The charge-carrier extraction efficiency of the *i*-layer is 90 % (contributions from *p*- and *n*- layers can be neglected). Calculate the electrical current density generated due to the absorption of photons inside the *i*-layer. You can neglect any reflection effects taking place at the interfaces (air/*p*-layer, *p*-layer/*i*-layer, etc).

Solution:

We first need to calculate how much optical power density is absorbed inside the *i*-layer.

The optical power density on top of the *p*-layer is: $J_{ph}(0) =$ 10 mW/cm^2

The optical power density on top of the *i*-layer is: $J_{ph}(d_p) = J_{ph}(0) \cdot e^{-\alpha \cdot d_p}$

The optical power density on top of the *n*-layer is: $J_{ph}(d_p + d_i) = J_{ph}(0) \cdot e^{-\alpha \cdot (d_p + d_i)}$

Therefore, the optical power density absorbed in the *i*-layer can now be calculated:

$$J_{ph,abs} = \Delta J_{ph} = J_{ph}(d_p) - J_{ph}(d_p + d_i) = 7.824 \text{ mW/cm}^2$$

Next, we can calculate the flux of the absorbed photons from the absorbed optical power density:

$$J_{ph,abs} = \phi_{ph,abs} \cdot E_{ph}$$

$$\phi_{ph,abs} = \frac{J_{ph,abs}}{E_{ph}} = \frac{J_{ph,abs} \cdot \lambda}{h \cdot c_0}$$

The absorbed photons generate free charge carriers (electrons). However, not all of them can be successfully extracted. In our case, the extraction efficiency is 90 %:

$$\phi_{el} = \eta \cdot \phi_{ph,abs} \quad \rightarrow \quad J_L = \eta \cdot \phi_{ph,abs} \cdot q = J_{ph,abs} \cdot \eta \cdot \lambda \cdot \frac{q}{h \cdot c_0}$$

$\boldsymbol{J_L}$ **= 4.93 mA/cm²**

4.3 A GaAs laser beam at 868 nm with optical power density of 1 W/cm^2 shines perpendicularly on top of the *p*-layer of a silicon *p-i-n* photodiode with an active area of 0.2 cm^2. The thickness of the *p*-layer is 1 μm, the thickness of the *i*-layer is 10 μm, the thickness of the *n*-layer is 2 μm. The absorption coefficient of all layers is α = 700 cm^{-1}. The charge carrier extraction efficiency inside *p*- and *n*- layers is 10 %, the efficiency inside the *i*-layer is 100 %. Calculate the electrical current density generated due to the absorption of photons inside the *i*-layer. You can neglect any reflection effects taking place at the interfaces.

Solution:

The problem is solved in the same way as Problem 4.2, the only difference is that now we need to also take the contributions from the *p*- and *n*-layers into account.

a) *p*-layer: $J_{ph,abs}$ = 67.6 mW/cm^2, $J_{L,p}$ = 4.73 mA/cm^2

b) *i*-layer: $J_{ph,abs}$ = 469.4 mW/cm^2, $J_{L,i}$ = 328.63 mA/cm^2

c) *n*-layer: $J_{ph,abs}$ = 60.5 mW/cm^2, $J_{L,n}$ = 4.24 mA/cm^2

$\boldsymbol{J_L = J_{L,p} + J_{L,i} + J_{L,n}}$ **= 337.6 mA/cm²**

$\boldsymbol{I_L}$ **= 67.5 mA**

4.4 A light beam at 868 nm shines perpendicularly on top of the *p*-layer of a silicon *p-i-n* photodiode. The thickness of the *p*-layer is 500 nm, the absorption coefficient is α = 700 cm^{-1}. Calculate the thickness of the *i*-layer, if the spectral response is 100 mA/W. Assume 100 % extraction efficiency in the *i*-layer and ignore contributions from the other layers. Also ignore any reflection effects taking place at the interfaces.

Solution:

The spectral response is defined as the ration of the (short-circuit) photo-generated electrical current to the incident optical power.

Spectral response: $\boxed{SR = \frac{I_L}{P_{ph}} = \frac{J_L}{J_{ph}}}$

To solve the problem, we need to express the current in a similar way as in Problem 4.2.

$$J_L = J_{ph,abs} \cdot \lambda \cdot \frac{q}{h \cdot c_0} = J_{ph} \cdot \left(e^{-\alpha \cdot d_p} - e^{-\alpha \cdot (d_p + d_i)}\right) \cdot \lambda \cdot \frac{q}{h \cdot c_0}$$

$$SR = \frac{J_L}{J_{ph}} = \left(e^{-\alpha \cdot d_p} - e^{-\alpha \cdot (d_p + d_i)}\right) \cdot \lambda \cdot \frac{q}{h \cdot c_0}$$

The thickness of the *i*-layer can then be determined from this equation.

$\boldsymbol{d_i}$ **= 2.29 µm**

4.5 Calculate the spectral response for the given semiconductor materials at the wavelength at which they exhibit the highest quantum efficiency: Silicon at 800 nm (QE = 0.80), Germanium at 1550 nm (QE = 0.55), InGaAs at 1700 nm (QE = 0.80).

Solution:

The spectral response is related to the quantum efficiency as: $\boxed{QE = SR \cdot \frac{1}{\lambda} \cdot \frac{h \cdot c_0}{q}}$

$\boldsymbol{SR_{Si}}$ **= 0.516 A/W**

$\boldsymbol{SR_{Ge}}$ **= 0.688 A/W**

$\boldsymbol{SR_{InGaAs}}$ **= 1.097 A/W**

4.6 The diameter of the active area of a silicon *p-i-n* photodiode is 0.4 mm. If the photodiode is illuminated at 700 nm with the optical power density of 0.1 mW/cm^2, a current of 56.6 nA is generated. What are the spectral response and the quantum efficiency of the photodiode?

Solution:

Spectral response: $SR = \frac{I_L}{P_{ph}} = \frac{I_L}{J_{ph} \cdot A} = \frac{I_L}{J_{ph} \cdot \pi \cdot r^2}$

Quantum efficiency: $QE = SR \cdot \frac{1}{\lambda} \cdot \frac{h \cdot c_0}{q} = \frac{I_L}{J_{ph} \cdot \pi \cdot r^2} \cdot \frac{1}{\lambda} \cdot \frac{h \cdot c_0}{q}$

SR **= 0.45 A/W**

QE **= 0.8**

4.7 The spectral response of an InGaAs *p-i-n* photodiode at 1550 nm is 0.87 A/W. The saturation current ("dark" current) is 5 nA. How much optical power should be shining on the photodiode, so that the short-circuit photo-generated current would be twice as much as the saturation current? What would be the photo-generated current, if the same amount of optical power would be shining on the photodiode at 1300 nm? Assume constant quantum efficiency in this range of wavelengths.

Solution:

Calculation of the optical power: $P_{ph} = \frac{I_L}{SR} = \frac{2 \cdot I_s}{SR}$

To determine the current at the wavelength of 1300 nm, we need to first calculate the spectral response at this wavelength. Since the quantum efficiency is assumed to be constant in this range of wavelengths, we can write:

$$\frac{SR_1}{\lambda_1} = \frac{SR_2}{\lambda_2} \quad \rightarrow \quad SR \text{ @ } 1300 \text{ nm} = 0.73 \text{ A/W}$$

$\boldsymbol{P_{ph} = 11.5 \cdot 10^{-9}}$ **W,** $\boldsymbol{I_L}$ **@ 1300 nm = 8.4 nA**