4. SOLAR CELL

Tasks:

a) Measure and analyse the $I(U)$ characteristics of a solar cell in dark.

b) Measure and analyse the $I(U)$ characteristics of a solar cell under illumination.

c) Measure and analyse the $I(U)$ characteristics of solar cells connected in parallel.

d) Measure and analyse the $I(U)$ characteristics of solar cells connected in series.

e) Determine the parameters of a PV module.

Introduction:

The primary function of solar cells is to convert the solar energy into electrical energy. In the modern days of rapidly diminishing reserves of fossil fuels, solar cells present a promising alternative source of clean energy. The electrical symbol of a solar cell is presented in Figure 4.1a; the orientations of current and voltage in this figure comply with the standard notation for two-pole elements (loads). Using this notation, the solar cell acts as a power generator if the operating point (combination of voltage and current) on the $I(U)$ characteristics is located in the fourth quadrant ($U > 0$, $I < 0$), as shown in Figure 4.1c. Since this is usually the region of operation that interests us the most, it is common to rotate the $I(U)$ characteristics across the horizontal axis (invert the orientation of the current), as will be shown later in Figure 4.5.

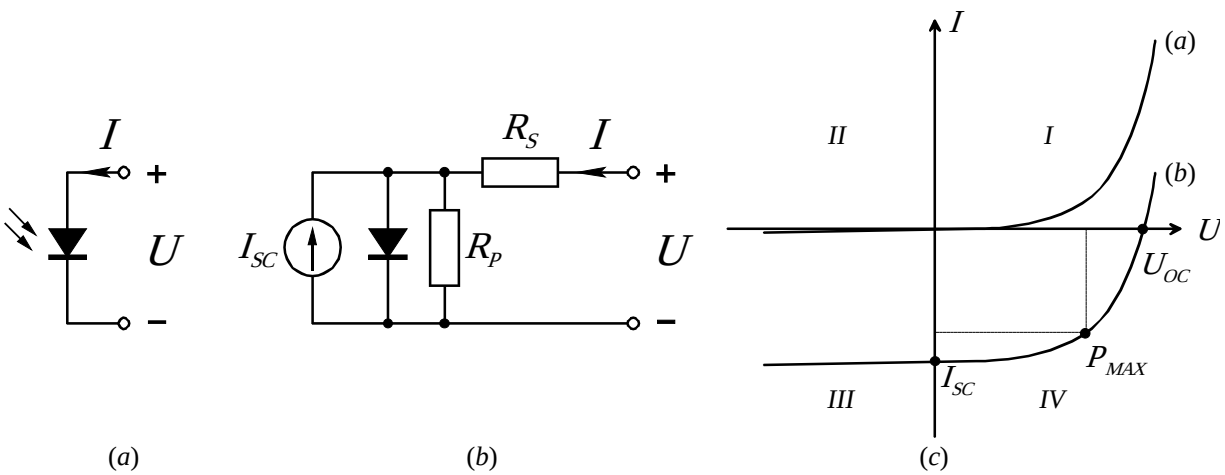

Figure 4.1: The electrical symbol of a solar cell (a), its simple circuit model (b) and $I(U)$ characteristics (c).

The most important parameters of a solar cell are those related to electrical power generation. These are short-circuit current I_{SC}, open-circuit voltage U_{OC}, maximal power P_{MAX}, and fill factor FF (all shown in Figure 4.1c). They all depend on illumination conditions and ambient temperature, and thus they are typically measured under well-defined standard test conditions (STC) – at 25 °C temperature and using a homogenous light source with the optical power density of 1000 W/m^2 spectrally distributed according to the reference AM1.5 (air mass 1.5) solar spectrum.

Additional information about the quality of the solar cell, which may significantly affect the primary parameters mentioned above, can be extracted from the so-called "dark" $I(U)$ characteristics, that is from measuring the $I(U)$ characteristics without any illumination. From the dark $I(U)$ characteristics, we can determine the saturation current I_s, the diode ideality factor n (both related to the quality of the *pn*-junction), the parallel resistivity R_P (related to defects in the *pn*-junction), and the series resistivity R_S (related to doping concentrations, the contact materials, etc.). All these parameters can be included in the simple circuit model that is shown in Figure 4.1b.

Experimental procedure:

a) Dark $I(U)$ characteristics

The dark $I(U)$ characteristics of the solar cell will be measured using the measurement setup shown in Figure 4.2. All the instruments will be connected to the computer via the GPIB cable, and they will be operated using the LabVIEW program *"OPT_Lab_04a.vi"*. Make sure that the solar cell is well covered during the measurement!

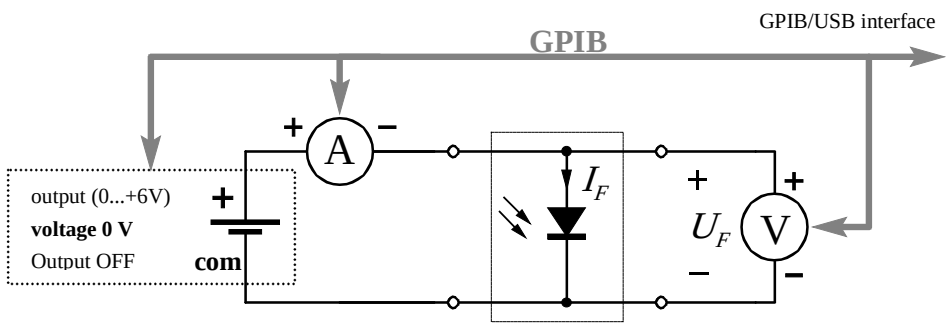

Figure 4.2: Measurement setup for measuring the dark $I(U)$ characteristics.

In the LabVIEW program, the measured dark $I(U)$ characteristics is plotted in a logarithmic plot, as shown in Figure 4.3. This is convenient because in a logarithmic plot, an exponential curve becomes a straight line. In our case, we can observe that in the central part of the plot, the measured dark $I(U)$ characteristics is indeed exponential (straight line segment), whereas in the regions of large currents or low voltages, the curve deviates away from the ideal exponential behaviour – this is where the effects of parasitic resistances R_S and R_P start to become more pronounced.

In the LabVIEW program, the central part of the measured dark $I(U)$ characteristics can be approximated by a straight dashed line which presents an ideal exponential curve. Based on the comparison of the measured curve to the ideal exponential curve, parameters R_S, R_P, I_S, n can be easily determined (automatically done in the program).

Parameters I_s and n can be determined from the shape of the ideal exponential curve (dashed line) according to Equation 4.1:

$$I = I_S e^{\frac{U}{nU_T}} \tag{4.1}$$

The series resistance R_S can be determined from the voltage deviation ΔU at large current values according to Equation 4.2:

$$R_S = \frac{\Delta U}{I_{\max}} \tag{4.2}$$

The parallel resistance R_P can be determined from the current at small voltage values (neglecting I_s) according to Equation 4.3:

$$R_P = \frac{U_{min}}{I_{min}} \tag{4.3}$$

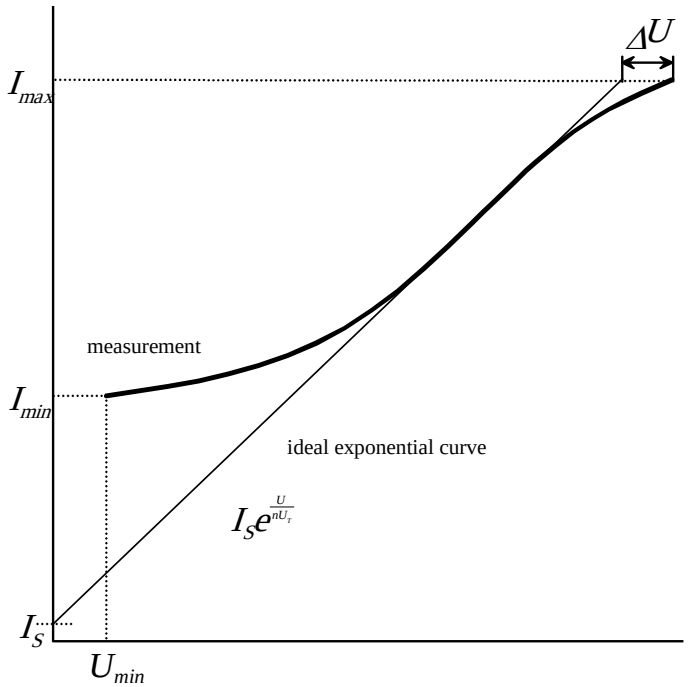

Figure 4.3: Dark $I(U)$ characteristics of a solar cell shown in logarithmic plot.

Parameters of the solar cell obtained from the dark $I(U)$ characteristics:

I_S = _____ n = _____

R_S= _____ R_P= _____

b) *I*(*U*) characteristics under illumination

The *I*(*U*) characteristics of the solar cell under illumination will be measured using the measurement setup shown in Figure 4.4. All the instruments will be connected to the computer via the GPIB cable, and they will be operated using the LabVIEW program *"OPT_Lab_04b.vi"*.

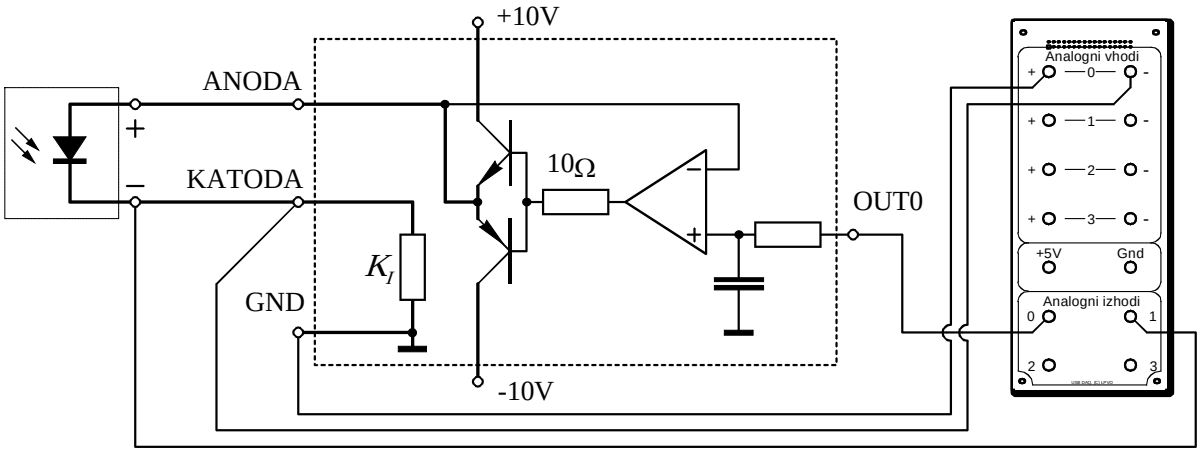

Figure 4.4: Measurement setup for measuring the *I*(*U*) characteristics under illumination.

The dashed rectangle in Figure 4.4 presents a variable power source that is controlled by the "0" output of the DAQ interface card. Using the source, we can set the voltage of the solar cell, and then we can measure the corresponding current. The current will be measured as the voltage drop on the measuring resistor. For this purpose, **type the value of the resistance K_I (written on top of the resistor) into the correct space in the LabVIEW program!**

Put the plate with the solar cell under illumination (lamp), take care that the entire cell is uniformly illuminated. In our case, a table-top lamp will be used which does not present standard illumination conditions but is nevertheless useful for analysis of different cell connection methods. Using the LabVIEW program, measure the *I*(*U*) characteristics in the voltage range from 0 to 2 V and current range from –1 to 999 mA. The program will automatically determine the values of the short-circuit current I_{SC}, the open-circuit voltage U_{OC}, the maximal power P_{MAX}, the current and voltage at the maximal power I_{MPP} and U_{MPP}, and the fill-factor *FF* from the measured characteristics, as shown in Figure 4.5.

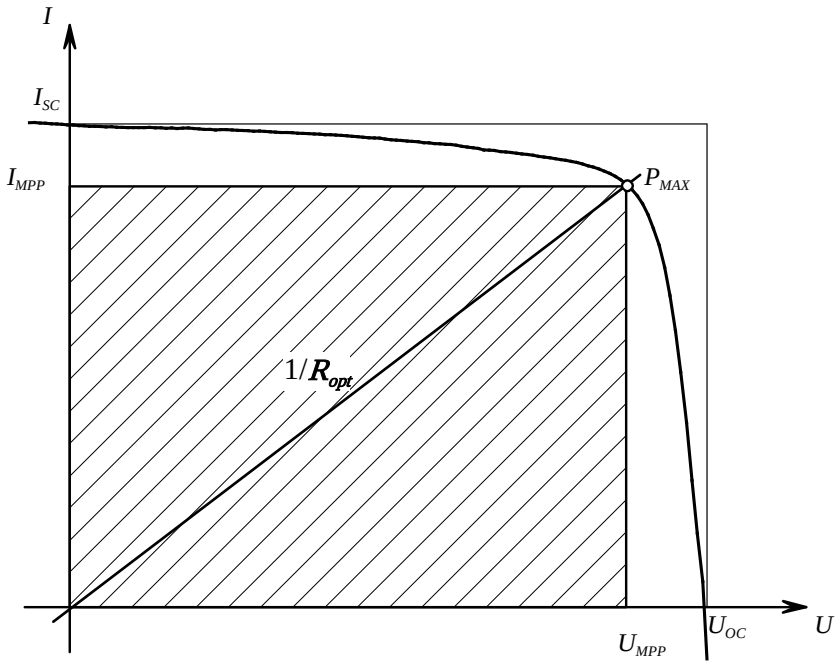

Figure 4.4: Parameters of the $I(U)$ characteristics under illumination.

Parameters of the solar cell obtained from the $I(U)$ characteristics under illumination:

I_{SC} = _____ I_{MPP} = _____

U_{OC} =_____ U_{MPP} = _____

P_{MAX} = _____ FF = _____

c, d) Parallel and serial connection of solar cells

Larger numbers of solar cells are typically connected together in photovoltaic (PV) modules. PV modules enable a higher power output compared to single cells, they provide mechanical and electrical protection and easier handling. Solar cells inside a PV module can be connected either in series or in parallel (a combination of both is also possible). Serial connection results in higher voltage values, and parallel connection in higher current values.

Since conventional solar cells already generate relatively large currents (a few A) and small voltages (below 1 V), serial connection is most widely used in all modern PV modules. This way, the current remains low and thus the energy losses dissipated on the cables can be limited. In larger PV systems (power plants), individual PV modules are also connected in series for similar reasons.

One of the most critical issues of **solar cells connected in <u>series</u>** is the adverse effect of shading. A single shaded solar cell can limit the performance of the entire PV module (the total electrical current of the serial connection is limited by the lowest current value, in our case this is the current of the shaded cell). Moreover, the shaded solar cell switches from the generator regime into the load regime of operation, which can cause the cell to heat up and eventually be destroyed. The issue can be solved by connecting bypass diodes in parallel with the solar cells, as shown in Figure 4.6.

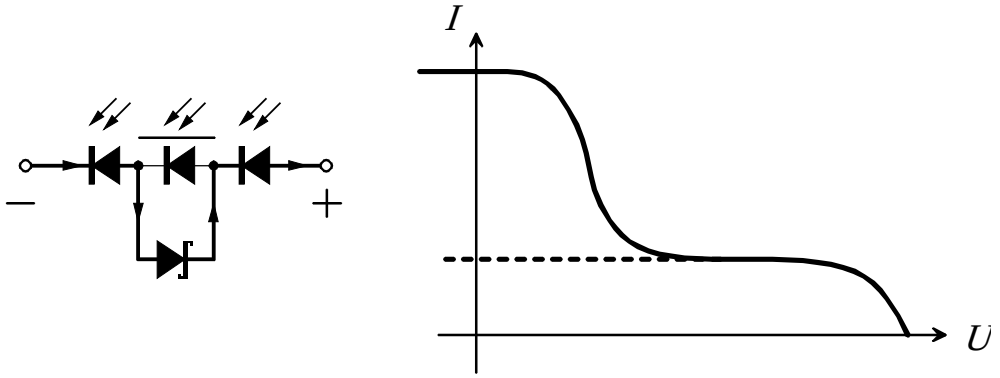

Figure 4.5: Shading of a solar cell without (dashed line) and with the bypass diode (full line).

However, it would be economically unfeasible to connect a bypass diode to every solar cell in modern PV modules. Instead, only a few bypass diodes are used, each of them connected to a *string* of solar cells. In the example in Figure 4.7, a PV module comprised of 60 solar cells connected in series is shown. Three bypass diodes are used (located in the junction box), each of them bypassing a string of 20 cells.

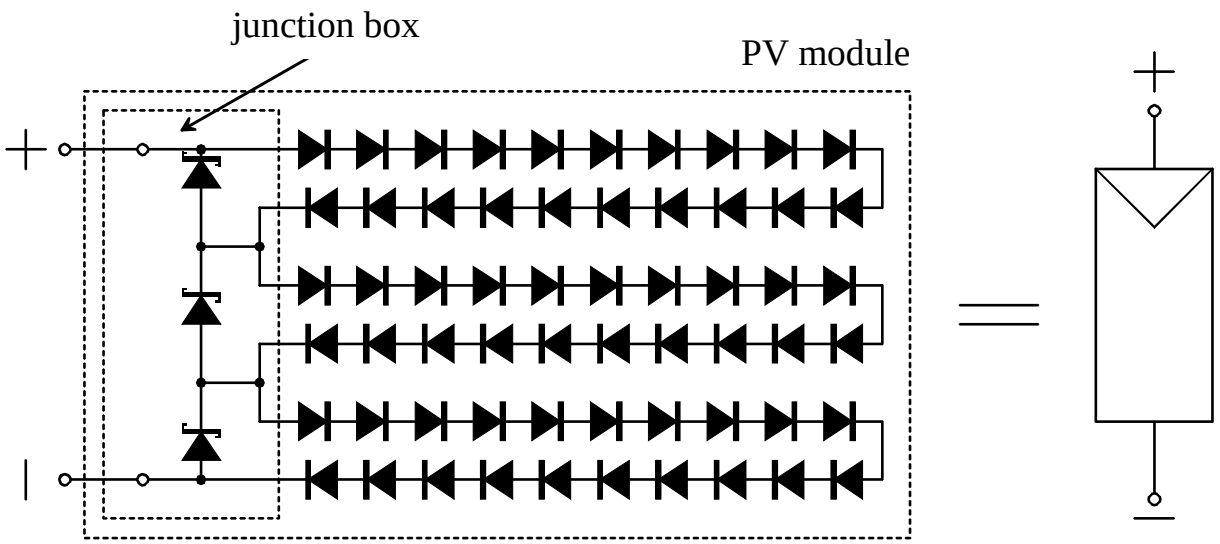

Figure 4.6: Connection schematic of a typical PV module comprised of 60 solar cells and 3 bypass diodes. The electrical symbol of the module is shown on the right.

The properties of serial and parallel connection of solar cells, as well as the effects of shading and bypass diodes, will be analysed in the following. Using the same measurement setup as before, measure the $I(U)$ characteristics of solar cell configurations listed in the tables below. **Make sure that all the cells are illuminated as evenly as possible, and be careful not to move the cells during the measurements!** Before you begin with the measurements, wait awhile for the temperature of the solar cells to stabilize. Print the results when all the measurements listed in each row of the table are completed.

i) Solar cells connected in parallel:

Measure the $I(U)$ characteristics of one, two, and three solar cells connected in parallel. Print the results.

Measurement	I_{SC} **[mA]**	U_{OC} **[mV]**	P_{max} **[mW]**
1 cell			
2 cells in parallel			
3 cells in parallel			

Comment the results.

ii) Shading of solar cells connected in parallel:

Measure the $I(U)$ characteristics of two solar cells connected in parallel. Add a third cell in parallel, but cover it completely. Measure the $I(U)$ characteristics again. Print the results.

Measurement	I_{SC} **[mA]**	U_{OC} **[mV]**	P_{max} **[mW]**
2 cells in parallel			
3 cells in parallel, 1 shaded			

Comment the results.

iii) Solar cells connected in series:

Measure the $I(U)$ characteristics of one, two, and three solar cells connected in series. Print the results.

Measurement	I_{SC} **[mA]**	U_{OC} **[mV]**	P_{max} **[mW]**
1 cell			
2 cell in series			
3 cell in series			

Comment the results.

iv) Shading of solar cells connected in series:

Measure the $I(U)$ characteristics of three solar cells connected in series. Then, cover one of the cells completely and measure the $I(U)$ characteristics. Connect the bypass diode in parallel to the shaded solar cell and measure the $I(U)$ characteristics. Print the results.

Measurement	I_{SC} **[mA]**	U_{OC} **[mV]**	P_{max} **[mW]**
3 cells in series			
3 cells in series, 1 shaded			
3 cells in series, 1 shaded + bypassed			

Comment the results.

e) Parameters of a PV module

In the final part of our lab work, we will estimate the parameters of a realistic PV module based on poly-crystalline silicon solar cells. Our estimation will be based on the following known facts about the module:

- All solar cells in the module are connected in series.
- The voltage at MPP of a single solar cell under STC is 0.5 V.
- The conversion efficiency of a single encapsulated solar cell under STC is 16 % (shading because of the contacts not taken into account).

First, calculate the amount of optical power that shines on the surface of a single solar cell during the measurement under STC:

- Measure the total surface area of a single solar cell:

  A = _____

- Estimate the area that is covered (shaded) by the contacts. Calculate the active surface area of a single solar cell:

  $A_{contacts}$ = _____

  A_{active} = _____

- Calculate the optical power that shines on the (active) surface of a cell under STC:

  $P_{ph,\ cell}$ = _____

By taking into account the active area of the cell, the incident optical power and the conversion efficiency, calculate the electrical power that is generated at MPP by a single solar cell under STC. From the calculated electrical power and the known voltage, also calculate the current at MPP of the solar cell under STC.

$P_{MPP,\ cell}$ = _____

$I_{MPP,\ cell}$ = _____

$U_{MPP,\ cell}$ = 0.5 V

Finally, estimate the parameters of the PV module under STC. Calculate the number of solar cells and take the connection type into the account. Assume that all of the cells are identical and identically illuminated, and disregard connection losses.

$P_{MPP,\ module}$ = _____

$I_{MPP,\ module}$ = _____

$U_{MPP,\ module}$ = _____

Also calculate the conversion efficiency of the entire PV module under STC. Why does the conversion efficiency of the module differ from the conversion efficiency of a single solar cell?

A_{module} = 99 cm · 165 cm = 16335 cm^2 = 1.6335 m^2

$P_{ph,\ module}$ = _____

η_{module} = _____